N4 N5

Design & Manufacture

Wood

THE TIMBER TREE

Name: …… Class:…… Teacher:……

Wood Introduction

Woods can be classified into 3 main groups; **Softwoods**, **Hardwoods** & **Manufactured Boards**.

Softwoods: These come from **coniferous trees** (trees that have needle like leaves and last throughout the year) these **grow quickly** and can be replaced quickly after being cut down. Softwoods are relatively **cheap to buy**.

Name	Properties	Uses	Cost
Red Pine	Straight grained, but knotty, quite strong and easy to work. Red/orange in colour	Building construction. Needs good protection when used outside.	Low
Parana Pine	Straight grained with few knots. Quite strong and durable but warps easily.	High quality interior construction and furniture.	High
Spruce (whitewood)	Quite strong with few knots. Resistant to splitting but not durable.	Fitted furniture e.g. Kitchen cabinets.	Low
Cedar	Straight grained and knot free. Very light and durable. Quite soft	Shed construction and good quality fencing.	High

Hardwoods: These come from **deciduous trees** (trees that lose their leaves every winter). They **grow slowly** and sometimes have twisted trunks. They are often not replaced when cut down and take a **long time to grow**. Their wood is **Expensive** and used for high quality products.

Name	Properties	Uses	Cost
Ash	Light in colour, flexible, tough bends well and varnishes well.	Tool handles, cricket/baseball bats, snooker cues, ladders and veneers.	Med
Beech	Mid-brown colour, hard, strong, tough, tends to warp but bends well.	High quality furniture, toys, tool handles and veneers.	Med
Oak	Light brown, hard, tough, heavy and durable outside. Gets harder with age.	high quality furniture, garden furniture, boats and veneers.	High
Mahogany	Red in colour, medium weight, quite strong, durable but warps easily.	high quality furniture, shop furniture, boat fittings and veneers.	High

Wood Introduction

Woods can be classified into 3 main groups; **Softwoods**, **Hardwoods** & **Manufactured Boards**.

Manufactured Boards:
These **are made from waste wood** left over from machining or working. All excess such as thin sheets (plywood), small strips/blocks (blockboard), wood chips (chipboard) and saw dust (MDF) are used to make boards.

Manufactured Boards are used to manufacture furniture due to the material being available in large sheets and because it does not warp.

Name	Properties	Uses	Cost
Plywood	Strong, stable, warps easily. Made by gluing layers of thin sheet wood together. It is important that the grain of each layer goes in a different direction to ensure maximum strength.	Bases of drawers or boxes. Backs of cabinets and wardrobes etc.	Med
MDF	Very strong and doesn't warp. Made from gluing and tightly compressing excess sawdust together.	Furniture and toys.	Med
Blockboard	Very strong and rigid and doesn't warp. Very heavy. Made from gluing strips/blocks of wood together.	Quality furniture, stage flooring and fire doors.	High
Chipboard	Heavy, warps easily and needs a good finish. Made by gluing and tightly compressing wood chips together.	Kitchen cabinets and worktops, roofing boards.	Low
Hardboard	Not very strong, warps easily and needs a good finish. Made similar to plywood.	Door panels, drawer bottoms and cabinet backs	Low

Marking Out Tools

Before you start making anything in the workshop, you will need to **mark out** any wood working joints and waste wood onto your wood.
We use many different **marking out tools** to do this...

Steel Rule

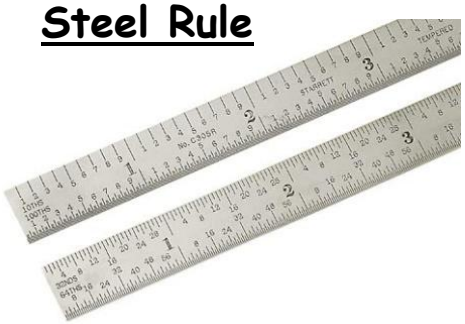

For **measuring** sizes on wood, metal and plastic.

Try Square

For marking lines at **right angles** (90 degrees) **to an edge** of a piece of wood.

Marking Gauge

For **marking lines parallel to an edge** of a piece of wood.

Mortise Gauge

For marking out the **width of a mortise hole** for a mortis and tenon joint.

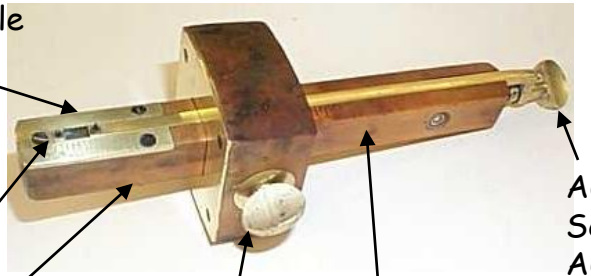

Cutting & Shaping Tools

Once you have finished marking out your job it is time to think about what tools you will need to cut and shape your work.

Saws and Sawing

It is important to note that there are **two categories of Saw**: Rip Saws and Cross-cut Saws.
Rip Saws are used for cutting along the grain. **Cross-cut saws** are used for cutting across the grain.

Bench Hook/Sawing Board

A bench hook is an aid to **crosscutting small pieces of wood** on the bench. As well as helping you to **hold the wood in place**, it also **supports the wood** - particularly the small piece that is about to fall off when you've finished cutting.

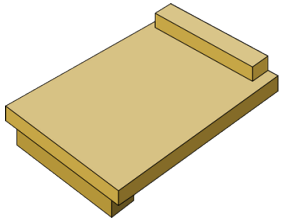

Tenon Saw

Mainly used for cutting out joints in wood. This saw **cuts very straight** because the **blade is very rigid** (stiff) due to brass back at the top of the saw. (**Cross-Cut** Saw)

Coping Saw

A **thin saw** used for making **curved cuts**. The blade can be set to almost any angle and is very **flexible** but can break easily so care and attention must be taken.

Panel Saw

Mainly used for making **straight cuts** in **large pieces** of timber. (**Rip Saw**)

Planes

Plane Safety

- Always ensure that the blade is set correctly to ensure that there is no risk of accident or damage to your wood/plane. Always place your plane side up on the work bench to ensure that the blade does not get damaged.

Smoothing and Jack planes

Although both Jack and smoothing planes look similar they are used for different jobs:

Jack planes are used to make long edges straight and square and are longer than smoothing planes.

Smoothing Planes are used to make surfaces smooth.

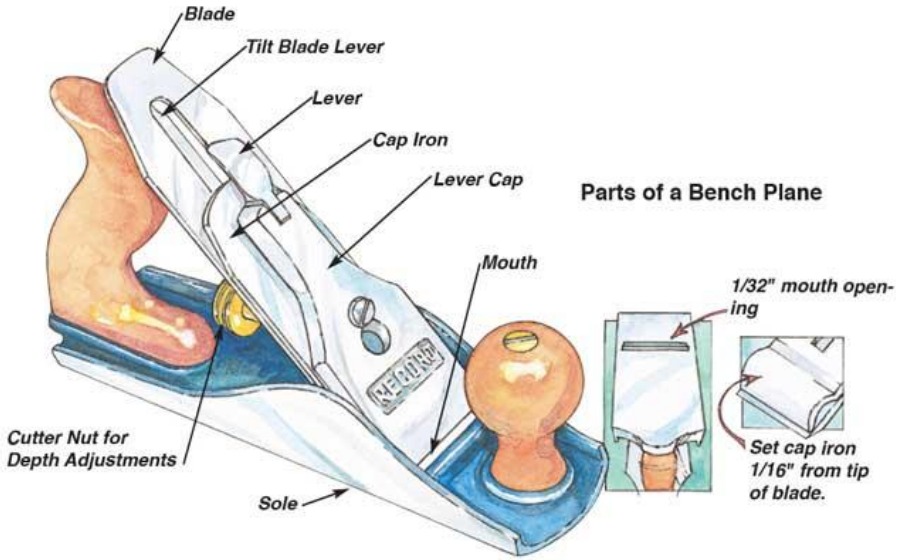

Plough plane

Used for **cutting grooves on the inside** face of a piece of wood. The depth of the cut can be set by adjusting the blade and the width from the edge of the wood can be adjusted by setting the fence of the plane.

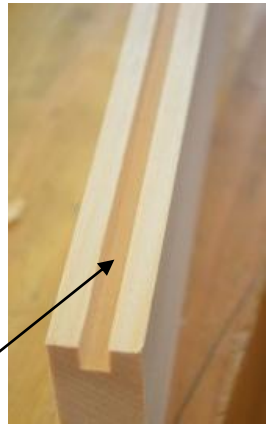

Example of cut made

Planes

Router Plane (Granny's Tooth)

Used **for cutting or tidying joints** such as a housing joint.

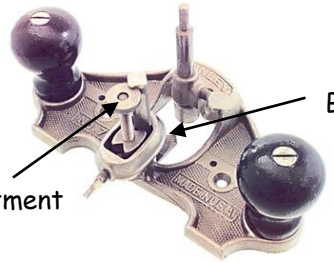

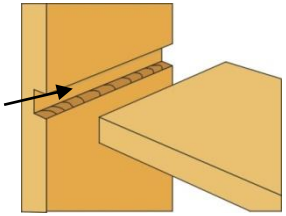

Rebate Plane

Used for **cutting grooves on an edge** of a piece of wood.

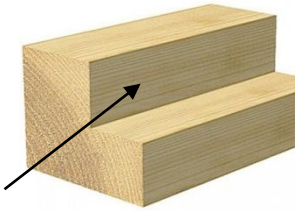

Both of these types of Plane are used for **smoothing** both faces and edges of pieces of wood.

Bullnose (Shoulder) Plane

The **shoulder plane** has a blade flush with the edges of the plane, allowing trimming right up to the edge of a workpiece. Is also used to plane the end grain of wood due to the shallower blade angle.

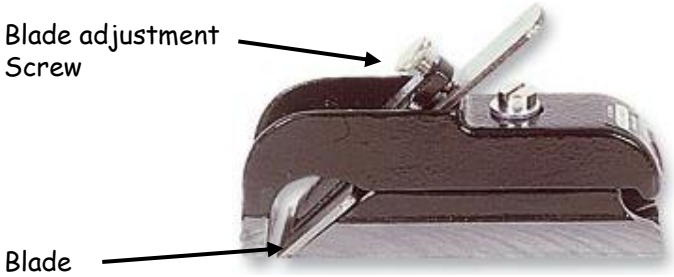

Spokeshave Plane

A **spokeshave** is a tool used to shape and smooth wooden rods and shafts – often used to make wheel spokes (not so much now, as there is not much demand for wooden wheel spokes), chair legs etc – also used to shape curves etc.

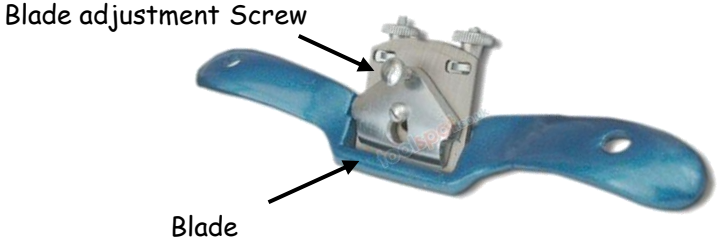

Chisels

Chisels are used for cutting away waste wood when creating woodworking joints.

Beech/Wooden Mallet

This is not a chisel but it is used along with chisels. The wooden mallet is used for hitting the handle of a chisel and driving it through a piece of wood to cut out waste wood.

Chisels

The handle on a chisel is normally made from Ash, which is a very strong hardwood, or polycarbonate plastic so that it will offer resistance from splitting when being hit with the mallet. Wooden chisels will always have some type of ferrule that helps stop the wood from splitting this is normally a metal ring on one or both ends of the chisel's handle.

Bevel-Edged Chisel

The blade is sloped at the edges. This chisel is normally used for pairing wood or cleaning/tidying up joints. Due to the blades having sloped edges it makes them easy to push into corners. They are often used for finishing dovetail joints.

End view of a bevel-edge chisel in use.

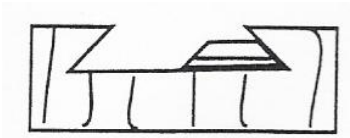

Firmer Chisel

Firmer chisels have straight sides which means that they are stronger and can be used for tougher/heavier work.

End view of a firmer chisel in use.

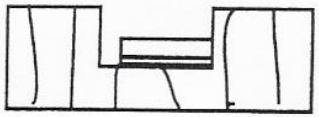

Mortise Chisel

Used for cutting the mortise (hole) in a mortise & tenon joint.

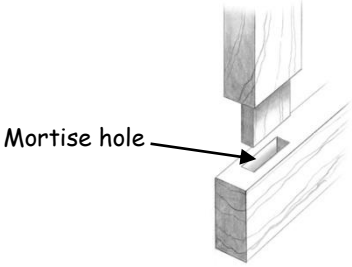

Timber Joints

The majority of joints used in woodcraft have been designed specifically to attain the **maximum possible strength** in the model they are holding together. The type of joint selected will depend on what is being constructed i.e. what forces are going to be exerted upon the artefact. The selection is also dictated by the **final appearance**. i.e. in furniture manufacture it is normally important to hide the joint, as a piece of furniture which has a strong joint construction but if the joints are showing it will not be very pleasing to look at and ultimately potential customers would most likely avoid buying such furniture.

Butt Joint

Butt joints are the quickest and **simplest to make** but are **not very strong**. They generally need dovetail nailing to increase the overall strength of the joint.

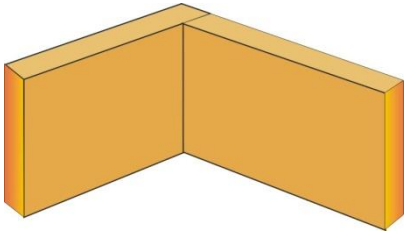

Dowelled Joint

These joints are both **neat and strong**. The **holes must be lined up exactly** but this can be done using a dowelling jig. The dowel will have a groove in the length so as to allow excess glue to escape.

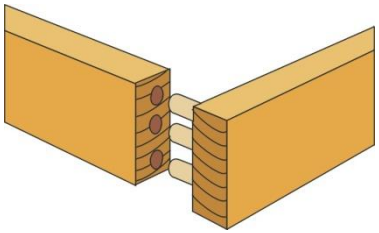

Through Housing

These joints are **simple to make** and are suitable where the two parts being joined together are the same width.

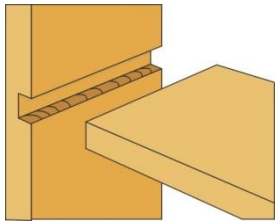

Stopped Housing

These are **harder to make**, but are **neater** because the joint does not show on the front edge.

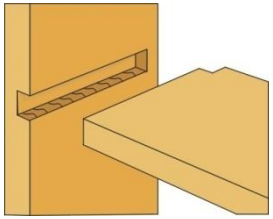

Corner Halving Joint
This joint is stronger than the butt joint and is also **simple to make**, but still needs **strengthening** with screws or dowels.

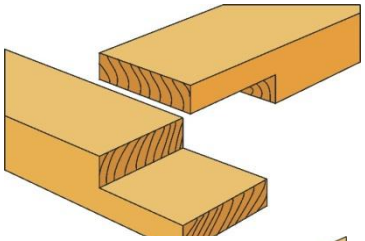

Corner Bridle
This joint is **strong** and **fairly easy to make**. They can be strengthened by dowels.

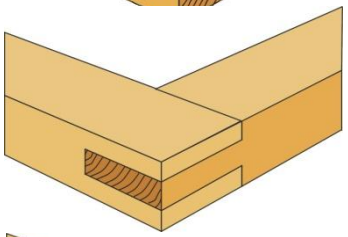

Mortise & Tenon Joint
The mortise & tenon joint is the **strongest tee joint** and can be further strengthened by wedging or dowelling.

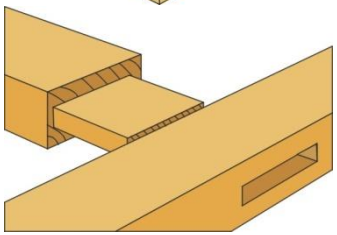

Haunched Mortise & Tenon Joint
This joint is used where the rail of a table will join into the top leg of the table. This could be regarded as a **hidden joint**.

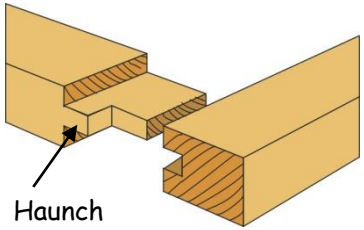

Dovetail Joint
This type of joint is very **strong** and can be only pulled apart in one direction. It is mainly used to **construct drawers**.

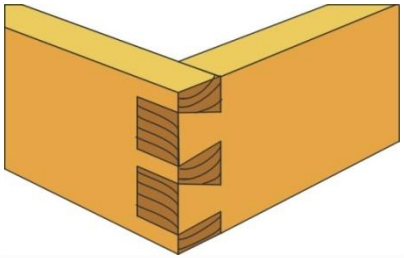

The World of Flat Pack

In today's society, people want furniture that is cheap and easy to move. With more and more people living in flats and apartments it is difficult to haul large pieces of furniture up flights of stairs and through tight doors. Ikea is one of the most successful producers of flat packed furniture that comes in boxes which makes it easier for people to manoeuvre new furniture into their homes.

The only down side is that they have to put the furniture together once it is in their homes and they do not often have the tools that a Joiner would have to make the joins from the previous slides.....

Benefits of flat-pack furniture for the manufacturer are the reduced storage and the reduced cost due to not having to assemble the furniture.

Benefits of flat-pack furniture for the consumer/customer are ease of transportation of the furniture to their homes and furniture which is lower in price than non flat-pack furniture.

Knock Down Fittings

Knock-down fittings are joints that can be put together easily. Normally people only need a screw driver, a drill, a mallet/hammer or other basic tools to put them together. They are temporary joints although many are used permanently to join together items such as cabinets and other pieces of furniture that are purchased in a flat pack.

Common Knock down fittings are: **Plastic or wooden corner blocks, Cam lock fittings & Scan fittings**

Plastic corner Block

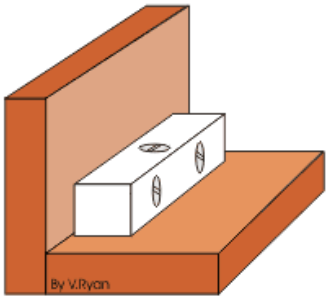

The corner block is pressed against the two pieces of material

Screws are used to fix the block into position. This type of joint is used to fit modern cabinets such as those found in a kitchen. It is a relatively strong joint and it has the advantage that it can be dismantled using a screwdriver.

Wooden corner Block

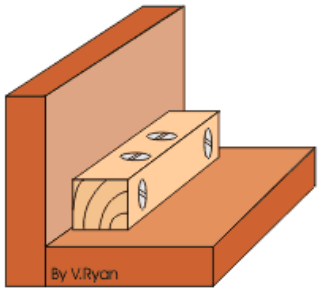

A piece of material such as pine can be drilled and screws can be passed through these holes.

This gives a cheap and effective knock-down joint. The screws are normally countersunk into the knock-down fitting.

CAM LOCK FITTINGS

The disk fits into a recess in the first side of the cabinet. It rotates by inserting a screwdriver into the slot in its side. The shaft is screwed into the second side of the cabinet.

The collar of the shaft is passed through the hole in the second slot in the disk. When the disk rotates the shaft is locked in position. This keeps both sides of the cabinet locked together.

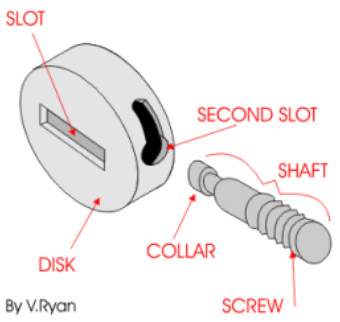

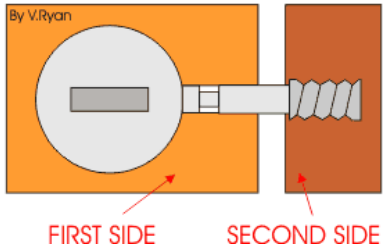

SCAN FITTINGS

These are strong enough to be either permanent or temporary joints. The cylinder is inserted into the first side of a cabinet in a pre-drilled hole. The screw is then pushed through the hole in the second side until it meets the cylinder. It can then be tightened with a screw driver until both sides of the cabinet pull together.

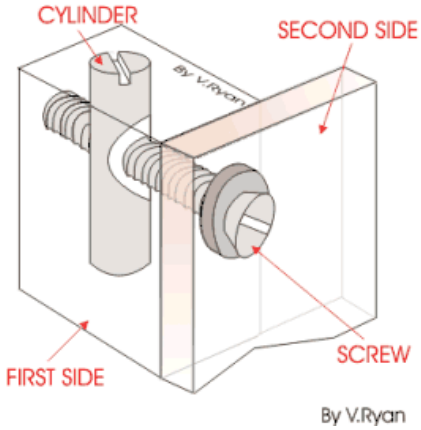

CLAMPING UP YOUR WORK

G-Clamps

G-clamps are used to **hold pieces of wood together**, most often when gluing. The screw section is tightened and the wood is sandwiched between the two flat pads with great pressure. Care must be taken when clamping as some woods can be soft and become marked permanently with the pressure of the pads, this can be stopped be putting a larger piece of scrap wood between the clamp and your job.
They are named G-clamps because the shape of the clamp looks like the upper case letter "G".

Sash Cramps

Sash Cramps are also used for holding pieces of wood together, usually whilst gluing. They are used for bigger jobs due to the cramps being so long. They are normally used in pairs to hold together wooden frames or carcasses. They work similarly to the G-clamps as they also sandwich the wood between it's flat pads however the size of the cramp can be changed by sliding the back pad back and forth until the required size then locked into place, before tightening up the screw at the other end.

Sash Cramps Example of cramping up a job

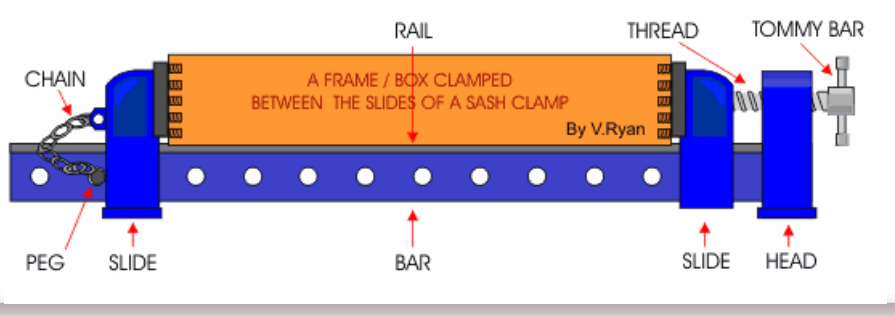

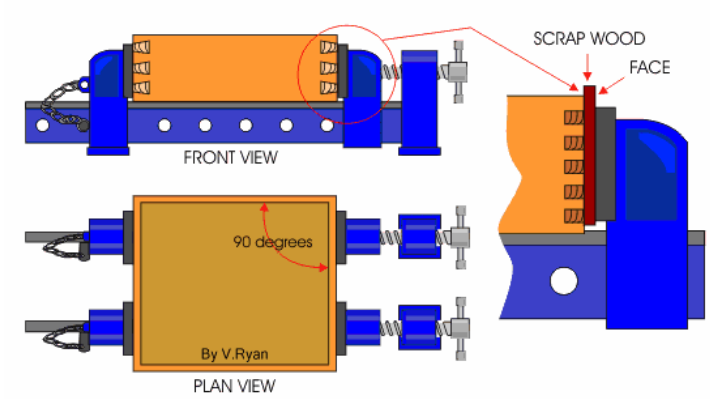

Checking Squareness

Before any gluing of frames can be carried out, the frame must be assembled **DRY**. i.e. it needs to be checked to ensure that it is **Square** and is not affected by Winding (Twisting of the frame). To check if the frame is square it is ideally done using long straight sticks to check the diagonals. See below. Another way to check for square would be to use a try square in the corner.

Table Frame

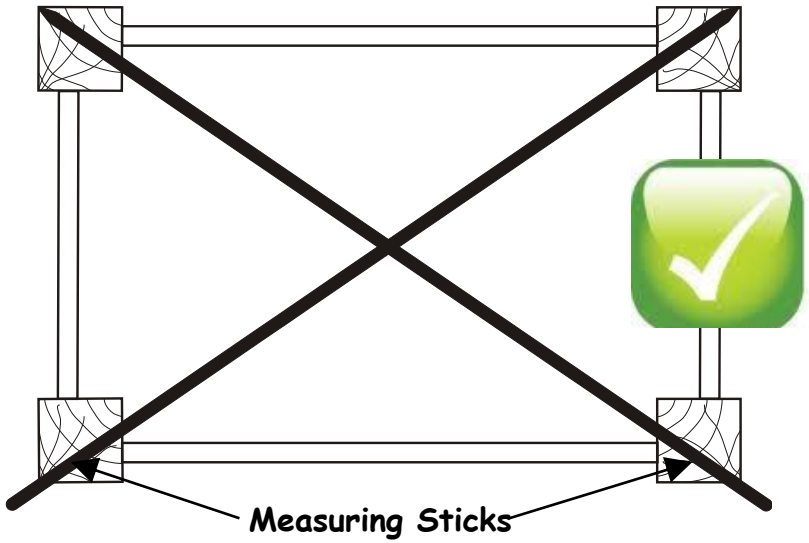

As can be seen from the drawing above, if a frame construction is **Square**, the **diagonal distance** (Corner to Corner) between each corner **will be the same** distance.

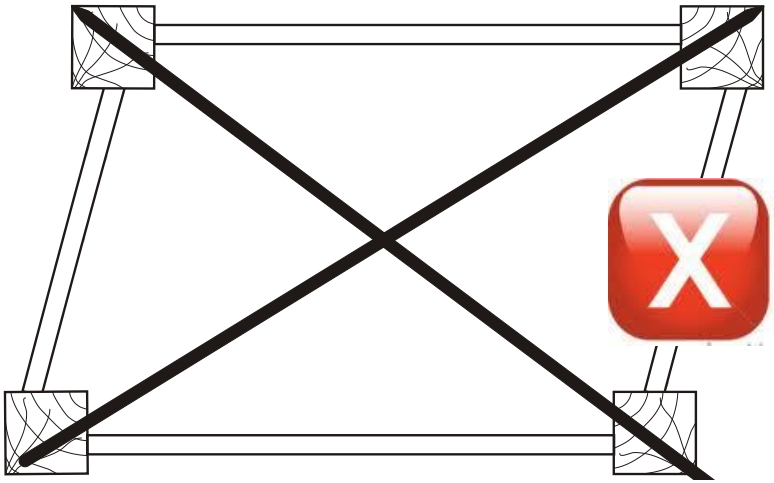

If the frame is not square the diagonal distance from corner to corner will be greater for one of the corners as shown above. This is **corrected simply by adjusting the sash cramps** until a satisfactory squareness is achieved.

APPLYING A FINISH

Before applying a finish it is important to make sure that the surface is **very smooth** and **free from blemishes** (marks and scratches) by firstly using an appropriate **plane** or scraper and then different grades of **abrasive paper/sand paper** in the direction of the grain. Sanding across the grain makes more scratches rather than making it smooth.

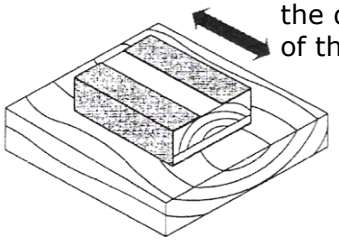

Always sand in the direction of the grain.

Sequence to applying varnish to a piece of wood

1. The **Smoothing Plane** (Smaller brother of the Jack Plane) is used first to remove pencil lines and any major blemishes.
2. Next, use a **Medium grade** of sand paper sand all surfaces.
3. The next stage is to apply a fine sprinkle of water over the surface of the wood. This raises the grain in the wood which when dry will be sanded off using a **Fine Graded** sand paper. This technique gives a better overall finish.
4. Using a **Fine Graded** sand paper sand down all surfaces.
5. Apply first coat of varnish. Allow to dry.
6. Using a **Fine Graded** sand paper sand down all surfaces.
7. Apply second coat of varnish. Allow to dry.

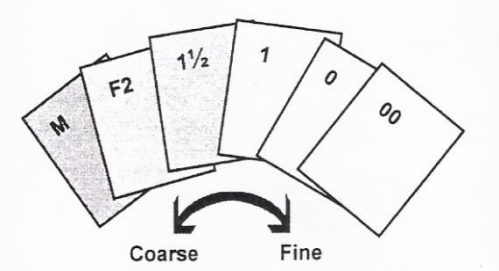

TYPES OF FINISH AVAILABLE

1.


2.


3.


4.


5.


6.


7.


1. · Water Based Varnish
2. · Spirit Based Varnish
3. · Wax Polish
4. · Coloured Wax Polish
5. · Danish Oil
6. · Coloured Stains
7. · Paints

MACHINE TOOLS - SANDERS

Belt Sander - You will see these in the school's workshops. They sand wood in a vertical motion.

Disc Sander – These sand in a rotational motion.

Hand held Orbital Sanders – these come in many shapes and sizes. Each have a dust extractor attached to them to stop the use breathing in exes dust. They sand by moving the sanding beds in small circular motions (orbital motions).

MACHINE TOOLS - DRILLS

Cordless Drill This does the same as the bench and pillar drill, but because it is not attached to anything it can drill holes in more awkward areas. This can also be used as an electric screwdriver if the drill bit is changed for a screw bit.

Drills Bits

Twist Drill
Used for drilling holes. A normal drill set will include sizes from 1mm to 14mm.

Forstner Bit
Used for larger diameter holes. When using this bit the hole is drilled very slowly so that the bit does not 'jam' in the wood.

Hole Saw
For large diameters a 'hole saw' can be used. The advantage of this type of drill bit is that the blade can be changed to give different sizes of diameter.

Machine Tools - Drills

BENCH DRILL

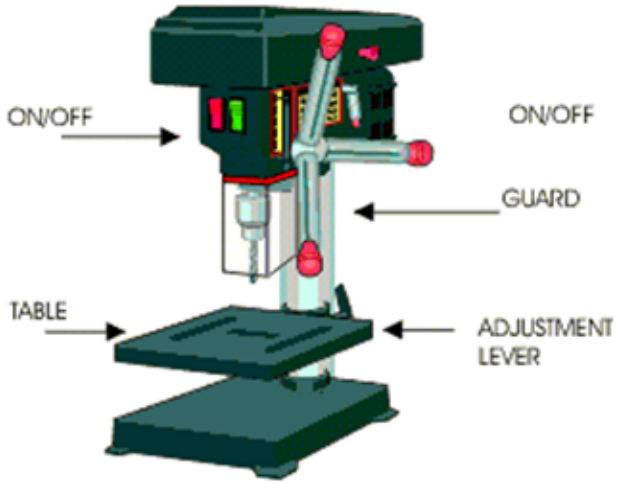

PILLAR DRILL

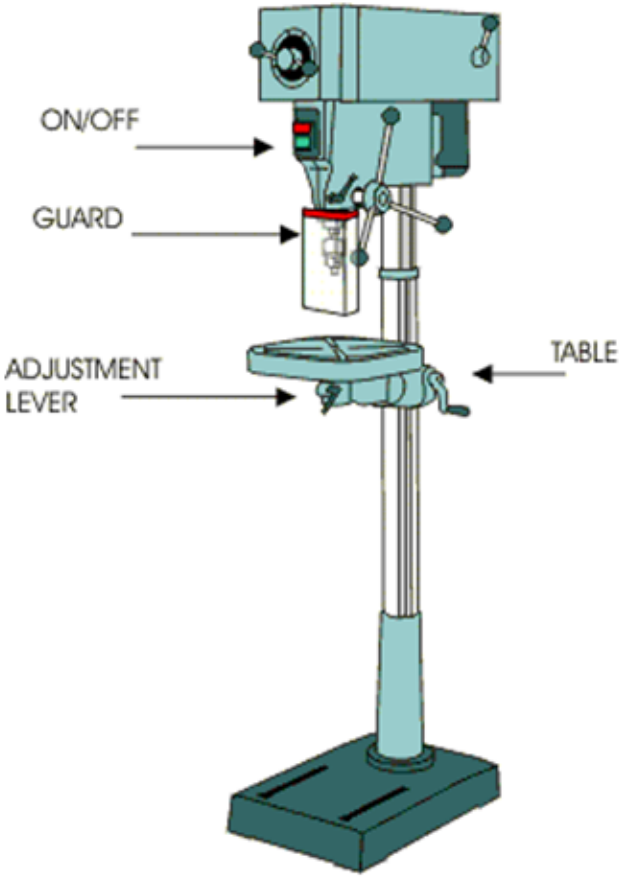

SAFETY

1. Always use the guard.
2. Wear goggles when drilling materials.
3. Clamp the materials down or use a machine vice.
4. Never hold materials by hand while drilling.
5. Always allow the 'chippings' to clear the drill by drilling a small amount at a time.
6. Follow all teacher instructions carefully.

Machine Tools – Mortise Machine

A mortise machine can be used to help cut out the mortise in a mortise and tenon joint. It uses a square chisel that contains a special twist drill to extract the waste wood.

MACHINE TOOLS – WOODTURNING LATHE

A typical wood turning lathe is seen below. Wood turning takes place either at the face plate (bowls) or between the two centres, the drive centre and the tail stock centre.
For example, if a table leg is being turned, this is carried out between the two centres. However, if a bowl is being turned, the blank is usually screwed to the face plate

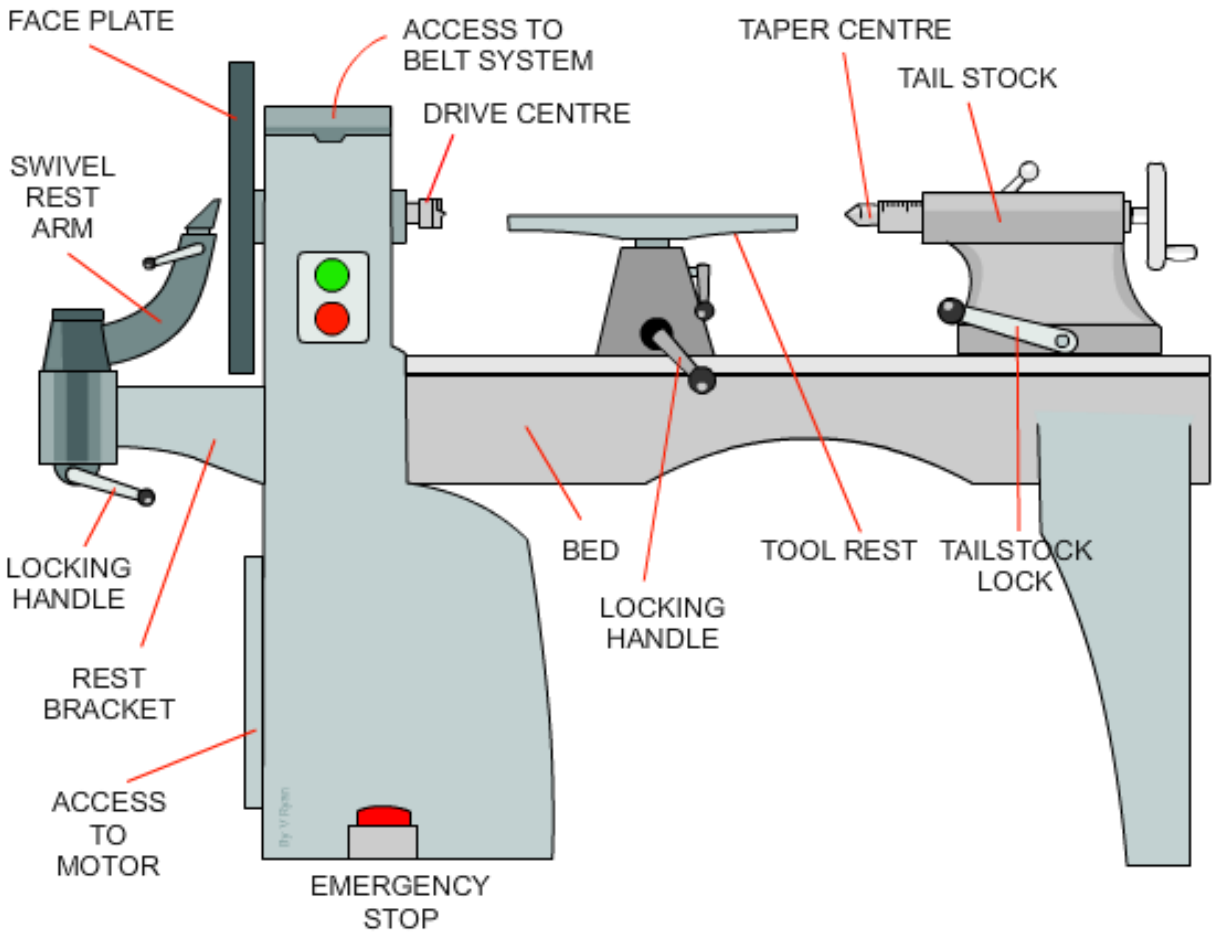

Woodturning Lathe
- Preparing a length of wood for centre turning

Find centre by drawing line from corner, to corner Of the square

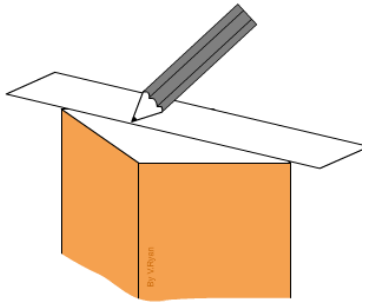

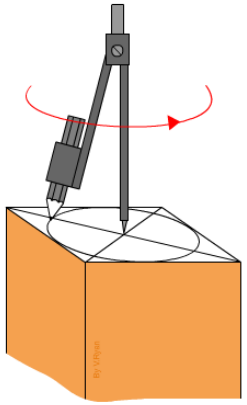

Using compass,draw circle to mark in shape

Use tenon saw to cut a diagonal groove to one end of the piece of wood. This helps the centre prongs to grip the peice of wood

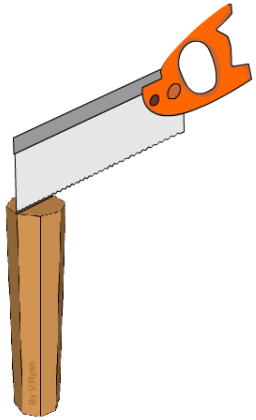

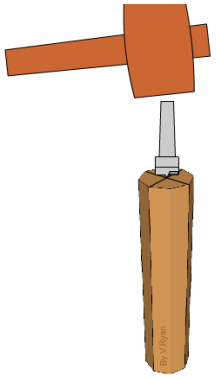

The drive centre is hammered into position at the grooved end using a mallet

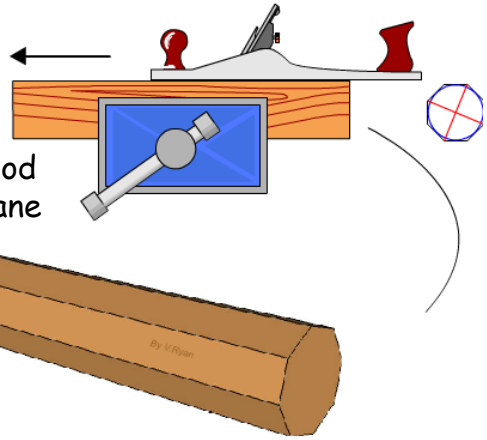

Remove wastewood using suitable plane

The wood is then set up in the lathe, ready for turning.

SIDE VIEW

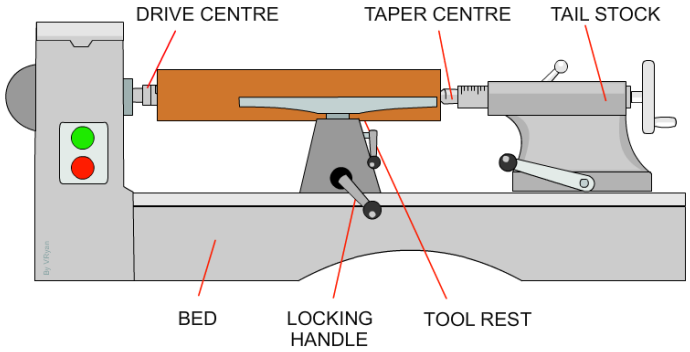

WOODTURNING LATHE - TURNING BETWEEN CENTRES

As the wood spins between the centres the person using the lathe will create a design on the wood by using different types of chisel at different pressures.

SIDE VIEW

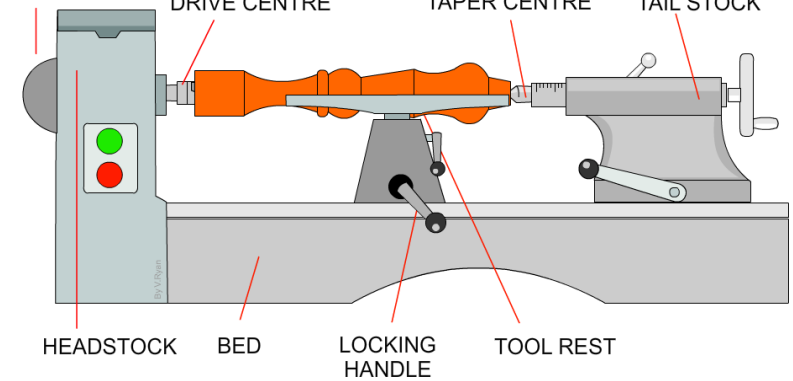

PLAN VIEW

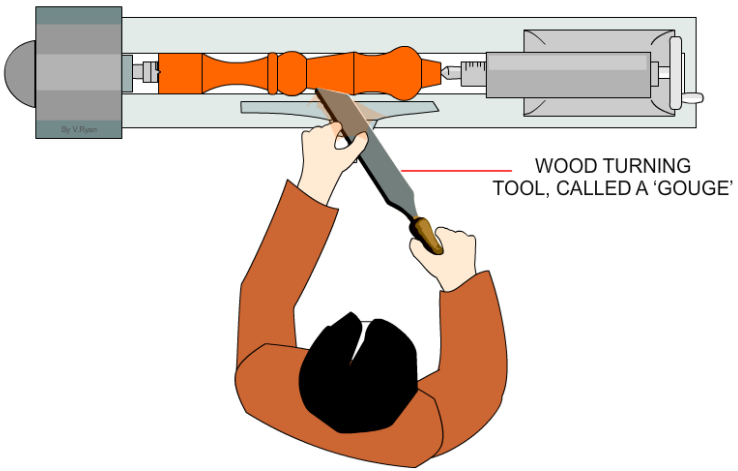

HEADSTOCK SIDE

TAILSTOCK SIDE

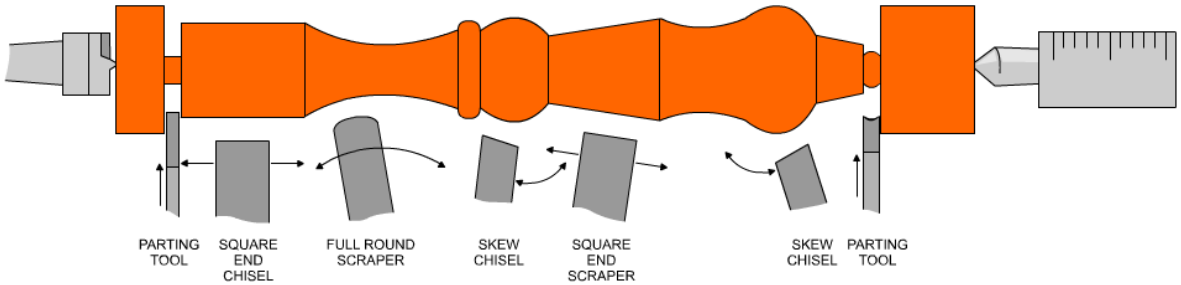

Various Chisels

WOODTURNING LATHE
- PREPARING A WOODEN BLANK FOR BOWL TURNING

The blank must not have obvious splits, cracks or any weaknesses which can shatter when blank is revolving at high speeds. Remove corners of blanks, as it is very dangerous to turn a square shaped section on a lathe.

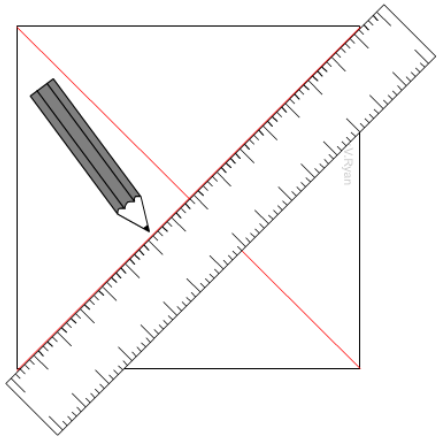

A circle is drawn with its centre at the crossing diagonal lines

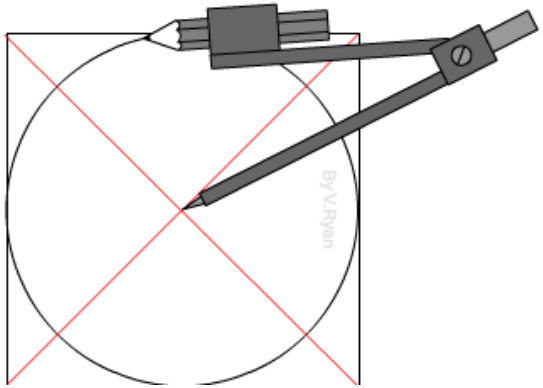

A bandsaw is used to remove the waste and the corners, ready for turning in the lathe

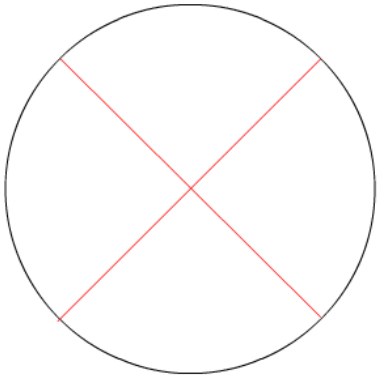

FIXING BOWL BLANK TO LATHE

Fix pine (pine plate takes the screw holes, as opposed to screw holes left in bottom of bowl blank) backing to face plate,
Affix paper to pine and to bowl blank with either suitable adhesive, or strong double sided tape

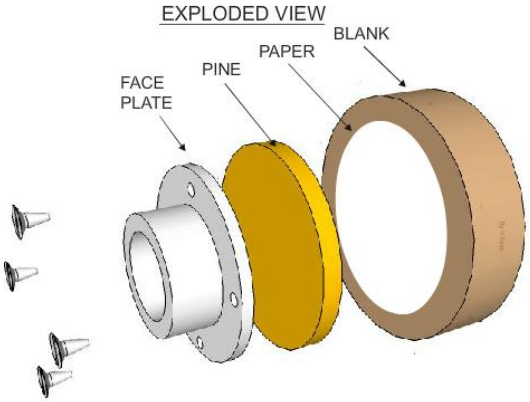

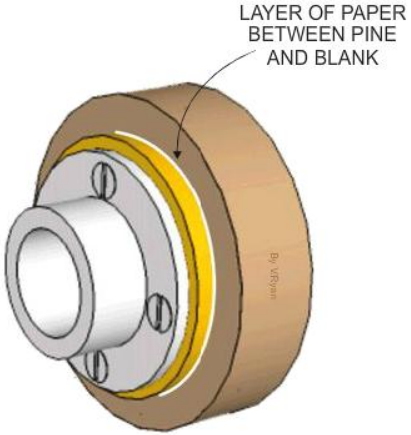

WOODTURNING LATHE
-TURNING A BOWL

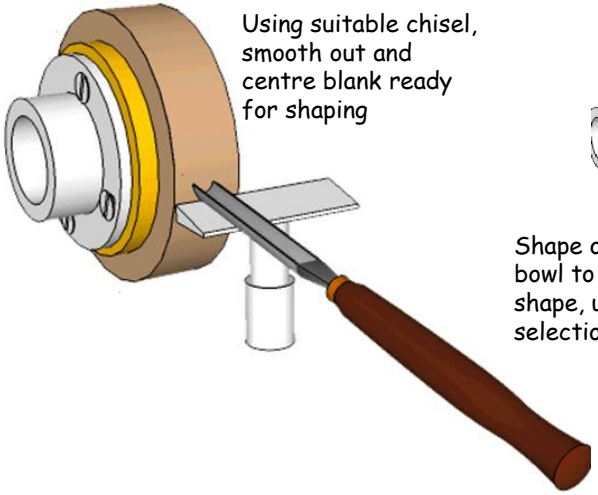

Using suitable chisel, smooth out and centre blank ready for shaping

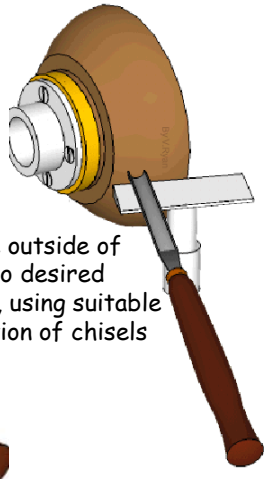

Shape outside of bowl to desired shape, using suitable selection of chisels

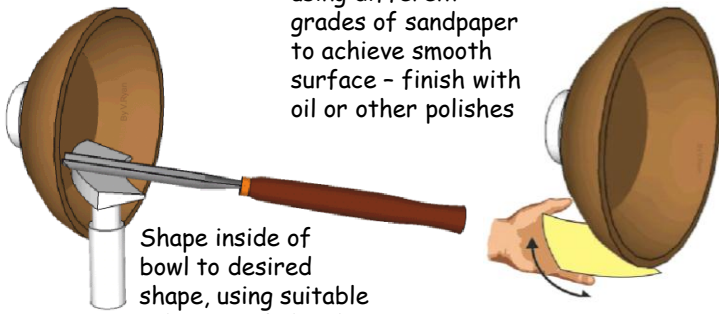

Smooth both inside and outside of bowl using different grades of sandpaper to achieve smooth surface – finish with oil or other polishes

Shape inside of bowl to desired shape, using suitable selection of chisels

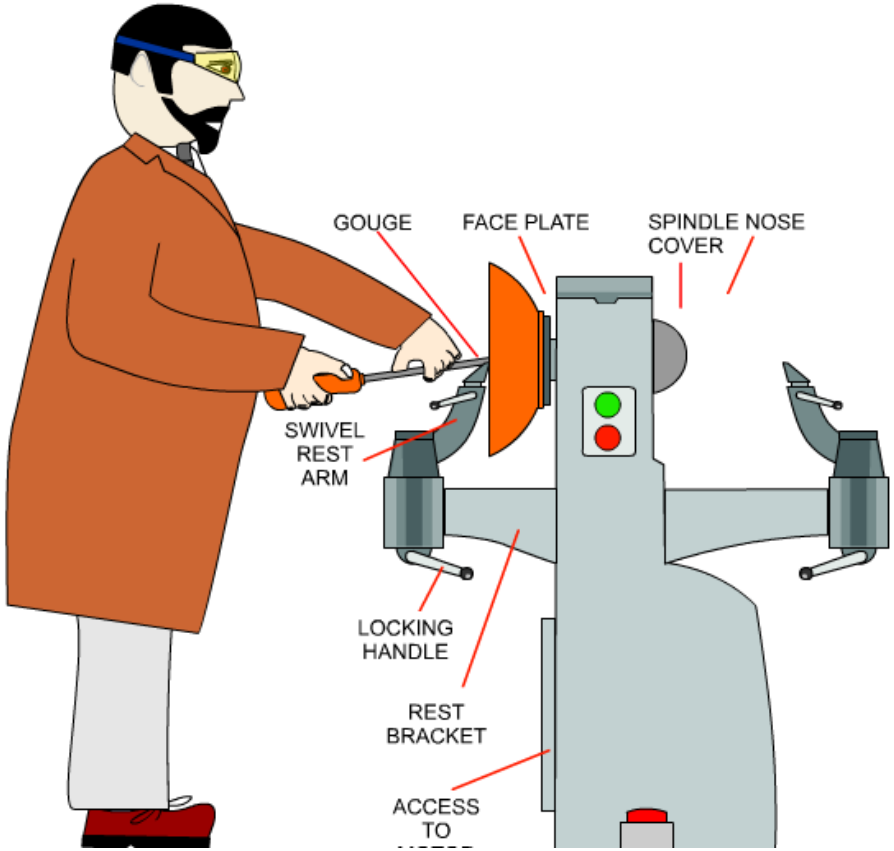

Sustainable Forest Lifecycle

The forest is a working environment, producing wood products such as wood pulp for the paper / card industry and wood based materials for furniture manufacture and the construction industry. Great care is taken to ensure the safety of wildlife and to preserve the natural environment.
Sustainable forests are the result of a commonsense policy to replace trees that are felled so that forests continue to exist providing natural materials for us all.